3SPTechnologies
Source of Smart Solutions

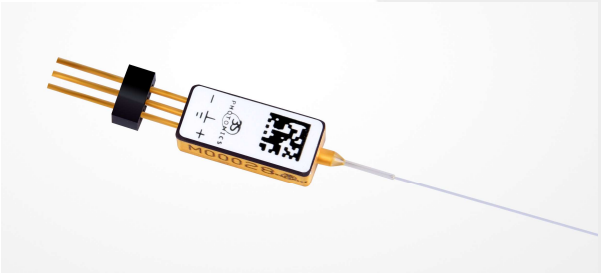

APPLICATION NOTES

Handling, Mounting, Testing and Operating 980nm 3-pin mini-pump module

1999UMM series

OVERVIEW

This Application Note overviews requirements for the mounting and operation of the 1999UMM 980nm 3-pin uncooled Pump Modules to ensure optimum device performance and reliable operation. This application notes addresses Handling, Mounting and Operation of the 1999UMM 3-pin uncooled Pump Module.

In order to get the maximum performance from the pump module for its targeted life time mission, handling and testing recommendations as well as the mounting procedure have to be followed closely.

If the requirements described into this document are not properly set-up by customer, its affiliates and sub-contractors during product handling, mounting and operating, 3SP Technologies liability cannot be engaged in case of issues or failures that may be encountered.

DESCRIPTION

The 1999UMM 3-pin 980nm uncooled pump module from 3SP Technologies has been specifically designed for ultra-compact size and low power consumption constrained applications. The 1999UMM features a 3-pin “pizza box” size optimized package incorporating a laser chip internally developed for uncooled operation over a wide temperature range from 0 to 80°C; chip is fully qualified exceeding Telcordia recommendations.
The wavelength is “locked” utilizing a Fiber Bragg Grating (FBG) located inside the module package onto a single mode fiber (SMF) pigtail.
The thermal performance are dependent on the customer product architecture and PCB design as well as module proper handling and mounting onto customer product PCB.

HANDLING RECOMMENDATIONS

Prevention against ESD damage

The uncooled 1999UMM 3-pin pumps are highly sensitive to electrostatic discharge. The HBM ESD damage threshold (standard human body model) for 3SP Technologies pump laser diode 1999LCV1 chip is 2000 V.
To avoid ESD damage, the following precautions are recommended during the handling, storage, and transportation of 3SP Technologies pumps:

- Workbenches should be grounded (through 1MΩ resistor) to prevent sudden discharge.
- Conductive wrist straps (grounded through 1MΩ resistor) should be worn when handling devices.
- Protective clothing (nylon overalls, for example) should contain conductive materials.
- Devices should be transported and stored in conductive bags or boxes.
- Paper should not be put in containers and common plastic materials should be avoided.
- Conductive pin savers should remain intact when devices are not in use.

Hermetic Seal Integrity

Package hermeticity is critical to preserving pump module performance and reliability. Following recommendation must also be applied:

- Never deform the component package in any way.
- Do not apply any excessive force to the package/fiber interface or strain relief assembly.
- Avoid repeated deformation or application of excessive forces to the device contact pins.

Unpacking the pump module

Due to module package small size and 80µm fiber pig-tail, it is mandatory to handle the unit using a specific tweezer with Teflon tips to avoid damaging package material and breaking the fiber pig-tail.

Prior to handle unit, clean tweezer tips with alcoholic liquid.

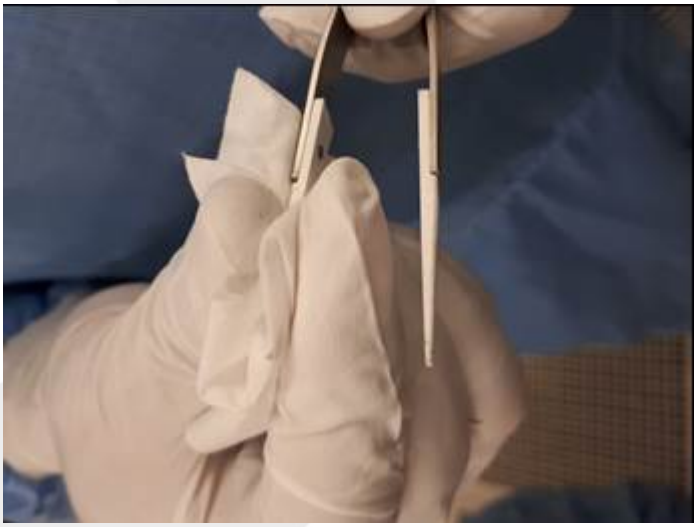

The following recommendations must be used for taking out the module from its packing:

- Handle the pump module by its package only

- Never hold the pump module neither by the leads nor by the pigtail

- The module boot (rigid tube used to protect the pigtail at the output the package) is fragile. Do not handle the module by the boot.
- Never pinch the fiber pigtail or apply an instantaneous traction on it which could generate micro-cracks in fiber silica.

MOUNTING PROCEDURE

In order to achieve pump module optimum optical performance and long-term stable operation of the modules, it is highly recommended to fulfil the following mounting procedure:

- Avoid any shock on the module boots.
- Do not apply any mechanical force on the module boots.
- Do not apply any liquid (flux or solvent) or grease on module boots.
- Carefully clean both heat-dissipater and pump module package surfaces to prevent any spurious particles or dust.
- Avoid any mechanical compression on the module package, including its boot.
- Do not coil the fiber pigtail up with permanent strength or twist.
- Avoid any micro-bends or local compression on the fiber.

The maximum specified case temperature is 80°C. Any higher temperatures on this surface under working conditions might damage the module.

Assembling the module onto the PCB board

In order to achieve 1999UMM pump module optimum optical performance and long-term stable operation of the module, it is highly recommended to fulfill the following mounting procedure:

- Avoid any shock on the module boots.

- Do not apply any mechanical force on the module boot and fiber pig-tail.
- Do not apply any liquid (flux or solvent) or grease on module boots.
- Use a large enough planar surface with flatness better than 30 µm and roughness better than 1 µm.
- Carefully clean both mechanical holder (or heat sink) and bottom package surface of the 1999UMM module to prevent any spurious particles or dust.
- Apply Thermal Interface Material (TIM) on the plane surface prior mounting the 1999UMM module onto the heat-sink.
- Place the pump package on the heat sink holder covered with the TIM. Put the bracket over the module package top side (side with the 3SP Technologies logo), and slightly tighten the 2 screws (M1.6x0.35mm x 2, Re 350N/mm²)
- Tighten the 2 screws with a maximum mounting torque of 200-450 mN.m (depending upon coefficient friction).

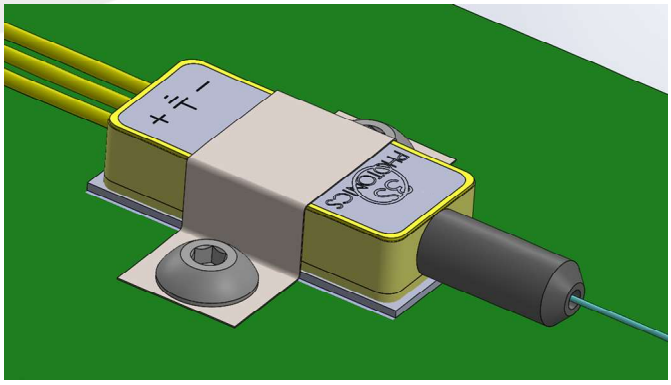

- Avoid any mechanical compression applied on the boot and do not apply higher load on the package lid as described in below “clamping the module” section.
- Do not coil the fiber pigtail up with permanent strength or twist.
- Avoid any micro-bends or local compression on the fiber.
- Then solder the 1999UMM leads to the PCB board, using a maximum temperature of 350 °C during a maximum soldering time of 5 s at 3.0 mm distance from the leads tip (refer to “Soldering of pump module leads” section for more details).

Clamping the module

Contact pressure reduces the interfacial resistance by helping mate surfaces and by physically thinning the thermal-interface material. Physical attachment methods include spring clips, screws, and spring-loaded push-pins. The amount of pressure required to reduce thermal resistance is a function of the interface material's compressibility and surface properties.

For a 3-pin mini-pump 1999UMM module, the maximum load on top of the module is 15N. Too high load could lead to lid deformation and potentially mechanical stresses on leads that could cause low melting temperature glass cracks. It is critical to ensure that any clamping

mechanism does not deform the lid, which would result in a potential compromise to the hermetic weld of the lid to the pump module body.

Leads' bending recommendations

In order to bend the leads, it is recommended to develop a specific fixture that is ESD free.

The pump body of the 1999UMM mini-pump should lay on an ESD free plane surface in contact with the module bottom (side without sticker) and be hold-on tightly with a clamping mechanism with less than 15N clamping force (refer to above **Clamping the module** section).

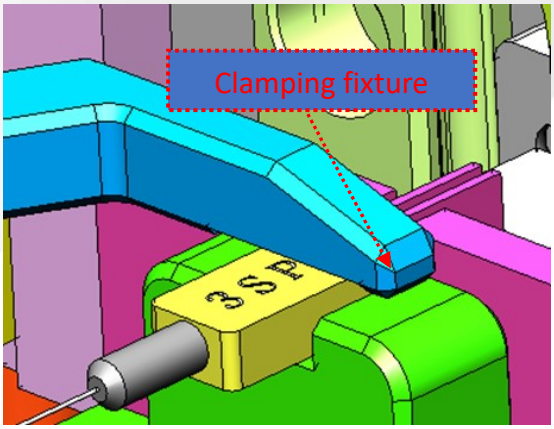

The leads should also lay on the ESD free plane surface: keep minimum 1.5mm +/-0.3mm length in contact with the plane surface that will remain straight.

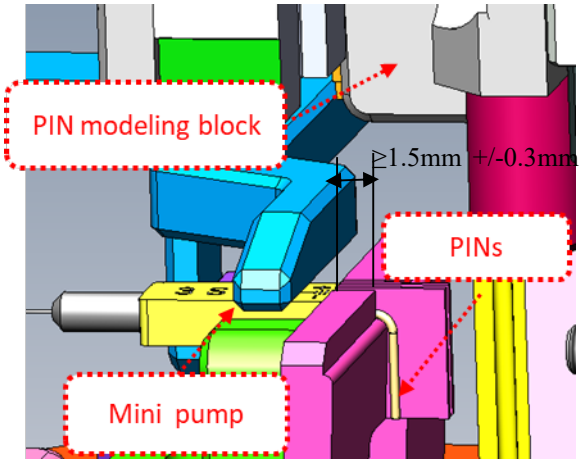

The pin modelling block is used to bend the leads: recommended pre-bending pressure to be applied is 0.15 to 0.25 MPa and not greater than 4 MPa.
The recommended material of the pin modeling block is stainless steel S136.
Special care for the bending fixture design is required to avoid removing material on the leads or avoid cracking the leads

Ensure that bending radius R is greater or equal to 1mm (see below picture)

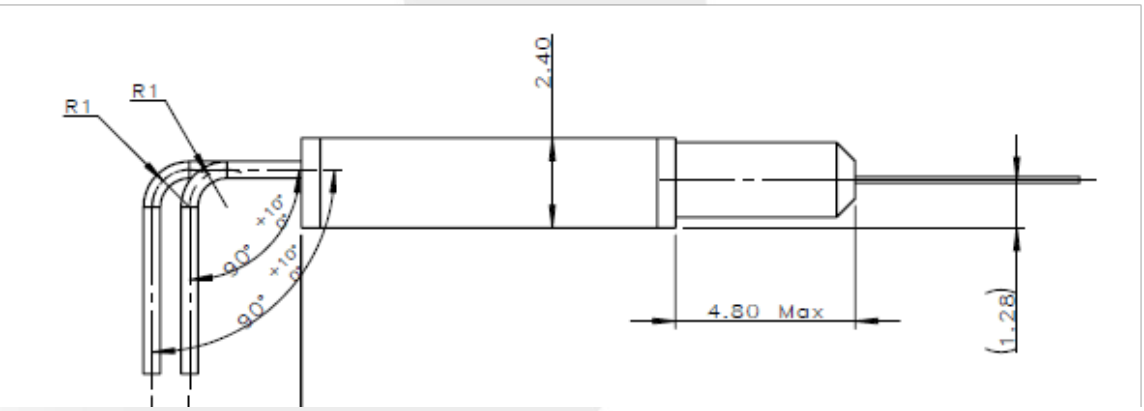

Un-assembling and re-packing the module

In case of modules to be returned to 3SP Technologies/O-NET factory, it is recommended to disassemble and to re-pack the pump modules according to the following steps:

- Use an adapted tool for un-soldering the leads.
- Use an adapted tool to remove the 1999UMM from the PCBA without applying mechanical stress on the 1999UMM module boot and its fiber pigtail: 3SPT recommend to use a specific tweezer with Teflon tips.
- For re-packing the module, use as much as possible the original packing materials or similar ones.
- Carefully place the module into its designated location. Carefully coil the fiber pigtail in the box, avoiding any stress on it.

Operating the pump module on its board

3SP Technologies' pump modules are designed and built for CW (Continuous Wave) operation. All other operating modes are not guaranteed for a statistically meaningful lifetime. Specifically, all of the following restrictions must be respected to avoid any damages to the devices:

- If you need to test the pump module by itself, do not operate the pump module if the fiber end is not cleaved with a 8° angle
- Care should be taken to avoid any electrical power supply transient and voltage overload.
- In any case, respect the absolute maximum ratings given in the absolute maximum rating table in the specification.
- Never connect the device to already polarized leads.
- Always use controlled current ramps to adjust the injection level to the set-point.
- When using fast current ramps, carefully check the following:
    - overshoots do not exceed 5 % of the current set point or the absolute maximum ratings and that stabilization occurs within 3 s.
    - no negative current or bias undershoot is recorded when switching-off the device.

- No ON-OFF operation is allowed! ON-OFF operation is defined as any repeated switching ON and OFF of the device on a timescale that allows thermal stabilization of some or all parts of the pump module (> 1 µs).
- For any other operating mode that might be needed by your application, please contact your 3SP Technologies/O-NET sales representative for more details.

Eye safety recommendation

This 1999UMM pump module should be handled observing certain precautions in order to avoid personal injury and component damage. Laser products emit invisible radiation which may be harmful to the human eyes. Be sure to follow standard safety protocol for eye and skin for Class IV IR lasers. Avoid direct or reflected contact with light emitted from the devices or fibers. An optical fiber is subject to breakage and thin glass fiber may easily pierce human skin or cause eye damage. Wear eye protection, use precautions when processing optical fibers, and dispose of any fiber fragments in a designated fiber optic disposal unit.

The 1999 UMM uncooled pump is classified Class 4 Laser Product according to IEC-60825-1 and precautions must be taken to avoid eye damage or skin burns. Take appropriate precautions to prevent undue exposure of naked eyes, as the beam emitted from the laser diode is harmful to human eyes. Avoid any possibility of looking into the laser package or the collimated beam along its optical axis when the device is operating. Try to limit fiber movement. Do not operate the pump module if the fiber end is not cleaved with a 8° angle.

Soldering of Pump Module Leads

IPC standard J-STD-001 provides guidelines for acceptable levels of cracking.

Hand Held Iron Soldering:
The pump module can be attached to the PCB using localized heating. The tips should be small enough to achieve reflow in less than 3 seconds without damaging the component. Peak temperature should not exceed 350°C for more than 5 seconds. To avoid thermal shock, the module leads should be preheated to 150°C before soldering and after soldering it must be cooled at ambient room conditions.

Hot Gas Soldering:

With this method, a small gun with a nozzle diameter of about 2.5 mm issues air, nitrogen or other suitable gas at a temperature of around 400°C and a flow rate of 1.5 liters/min. To avoid thermal shock, the module leads should be preheated to 150°C before soldering and after soldering it must be cooled at ambient room conditions. During soldering, the temperature of the module leads must be kept below 350°C to limit thermal stresses in the pump module.

3SPTechnologies
Source of Smart Solutions

CONTACT INFORMATION

Europe & Asia:	+33 169 805 855
North America:	+1 514 748 4848
	+1 888 922 1044

Customerservice@3spgroup.com
www.3sptechnologies.com

IMPORTANT NOTICE

Information in this document are typical and must be specifically confirmed in writing by your supplier before it becomes applicable to any order or contract.
Information is subject to change without notice.

AFFILIATED TRADEMARKS

3S PHOTONICS

3SPGroup

3S Photonics and 3SPGroup are 3SP Technologies affiliated trademarks.